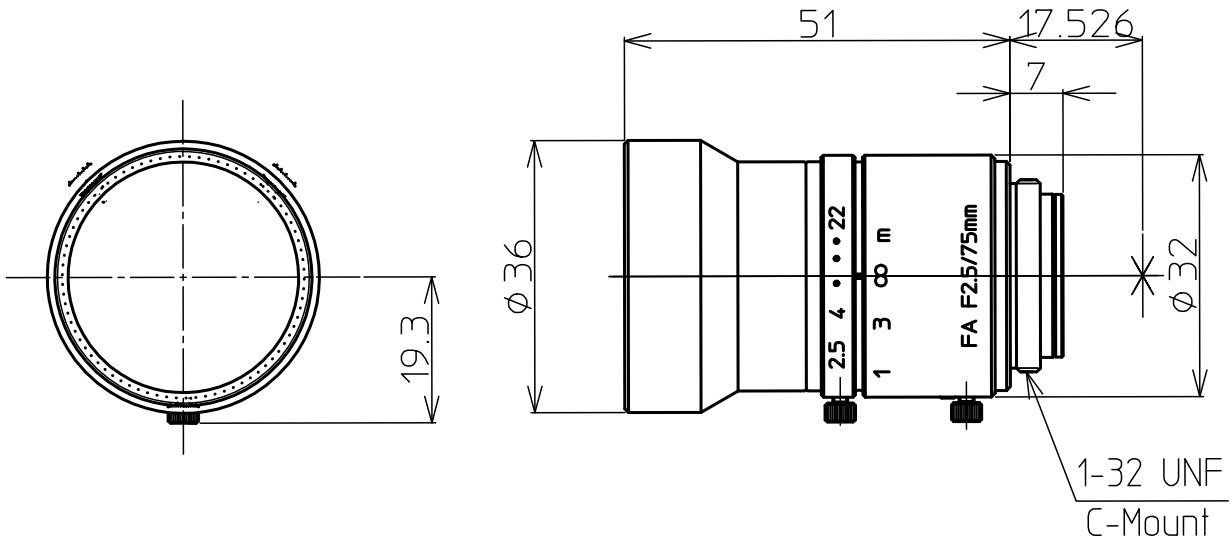

2/3" 2.5/75mm C		1/2"	1/3"
FOCAL LENGTH	f=75mm		
MAX. DIAMETER (RATIO)	F=1:2.5~22		
ELEMENT	5 Gr 5 Element		
PICTURE SIZE	6.6x8.8mm	4.8x6.4	4.8x3.6
ANGLE VER. ANGLE	5.0°	3.7°	2.8°
HOR. ANGLE	6.7°	4.9°	3.7°
DIA. ANGLE	8.3°	6.1°	4.6°
DISTORTION	-0.1%	-0.08%	-0.05%
SHOOTIG RANGE AT VER.	38.1mm	27.7	20.4
MINIMUM FOCUS HOR.	50.8mm	37.0	27.7
DISTANCE DIA.	63.5mm	46.2	34.7
MINIMUM FOCUS DISTANCE	1.2m 0.5m with adapter		
FLANGE BACK	17.526 mm in air		
BACK FOCUS	18.0mm in air		
FILTER SCREW SIZE	M34.0x0.5		
FRONT/REAR EFFECTIVE DIA.	Front φ30.2mm Rear φ12.4mm		
MOUNT	C-MOUNT		
EXIT PUPIL	-38.9mm		
TENPERATURE RANGE	-10~+45° C		
STORNG TNEPERATURE RANGE	-40~+60° C		
RESOLUTION CENTER/CORNER	Center 100 Lp/mm Corner 40 Lp/mm		

		LM75JC		
		2/3" F2.5 f=75mm		