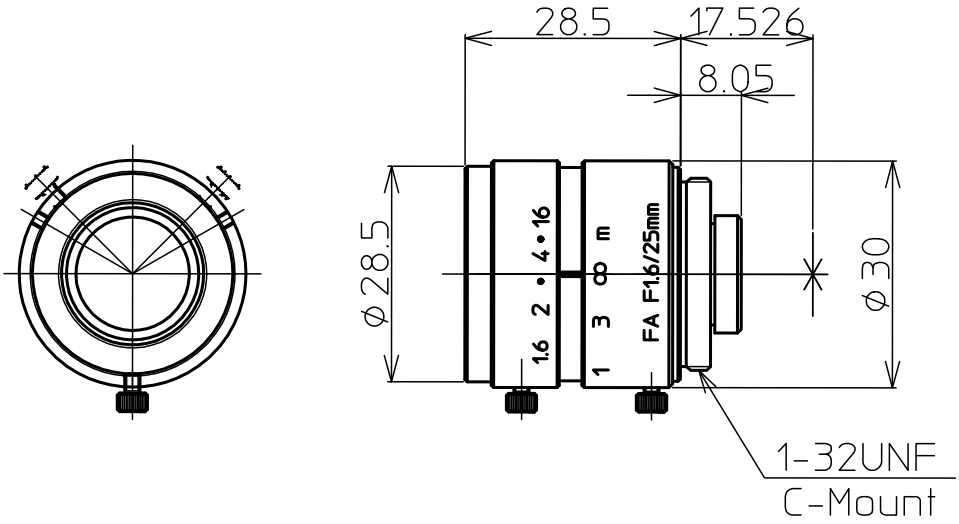

2/3" 1.6/25mm C		1/2"	1/3"
FOCAL LENGTH	f=25mm		
MAX. DIAMETER (RATIO)	F=1:1.6~16		
ELEMENT	5 Gr 5 Element		
PICTURE SIZE	6.6x8.8mm	4.8x6.4	3.6x4.8
ANGLE VER. ANGLE	15.7°	11.4 °	8.6 °
HOR. ANGLE	21.0°	15.3 °	11.5 °
DIA. ANGLE	26.3°	19.1 °	14.3 °
DISTORTION	-0.6%	-0.2%	-0.1%
SHOOTIG RANGE AT VER.	275mm	199.0mm	149.1mm
MINIMUM FOCUS HOR.	368mm	266.0mm	199.0mm
DISTANCE DIA.	465mm	334.0mm	249.2mm
MINIMUM FOCUS DISTANCE	0.2m		
FLANGE BACK	17.526 mm in air		
BACK FOCUS	10.32mm in air		
FILTER SCREW SIZE	M27x0.5		
FRONT/REAR EFFECTIVE DIA.	Front Ø14.6mm	Rear Ø10.7mm	
MOUNT	C-MOUNT		
EXIT PUPIL	-26.2mm		
TENPERATURE RANGE	-10~+45° C		
STORNG TNEPERATURE RANGE	-40~+60° C		
RESOLUTION CENTER/CORNER	Center 100 Lp/mm	Corner 40 Lp/mm	
-			

		LM25JC		
		2/3" 1.6/25mm		